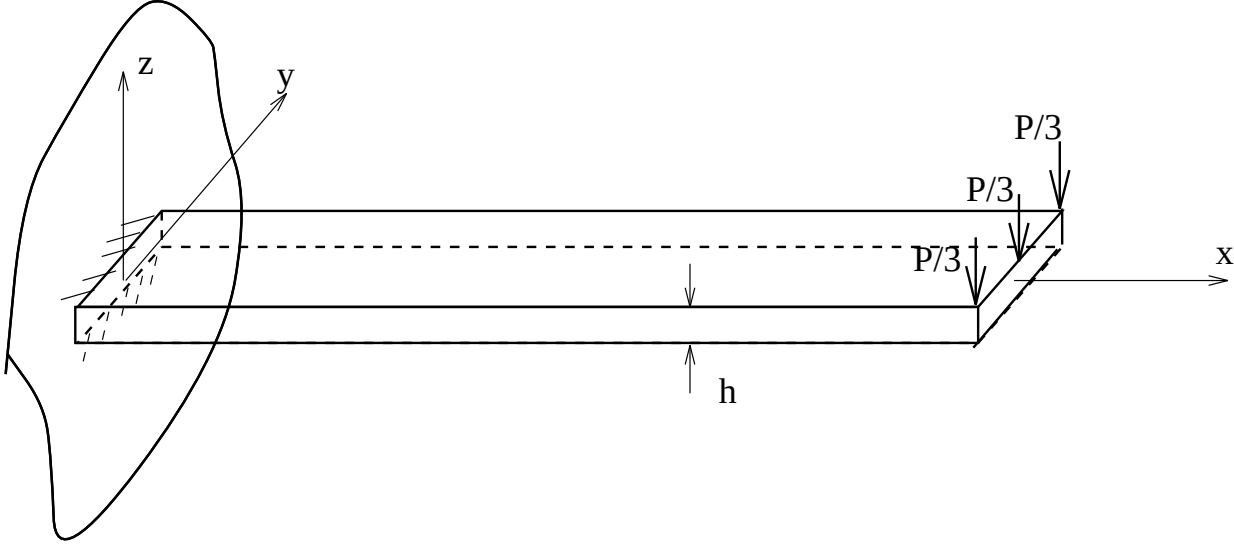

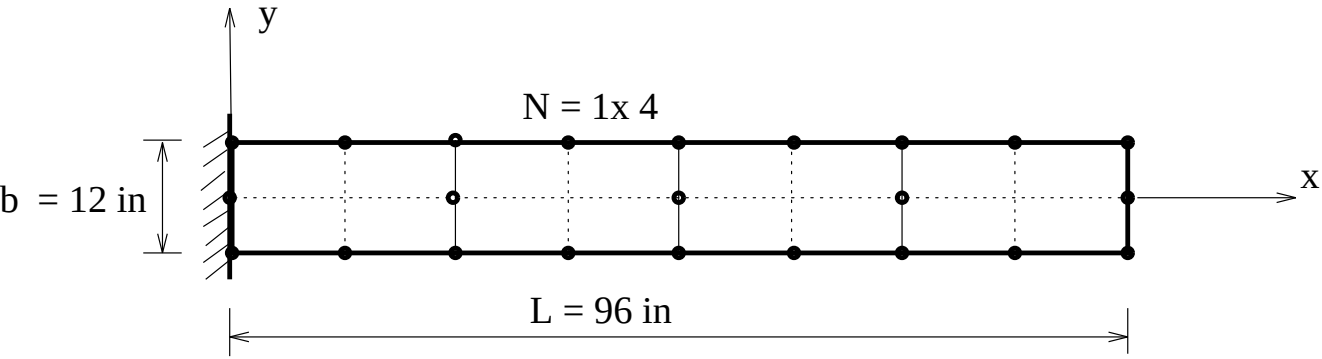

E = 3E+7 psi

nu = 0.25

P = 40 lbf

h = 1 in