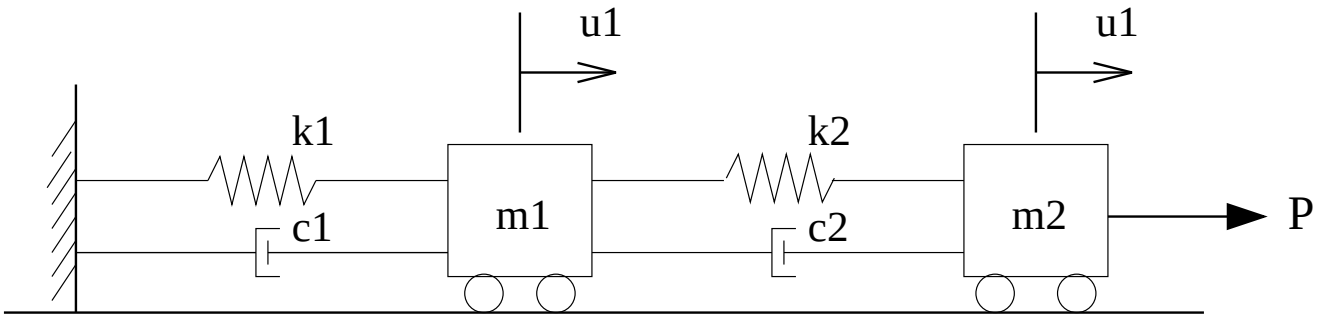

ks1 = 2.0 N/cm

kt1 = 0.8 N/cm

fy1 = 18 N

m1 = 1.0 kg

c1 = 1.5 N·sec/m

ks2 = 1.5 N/cm

kt2 = 0.5 N/cm

fy2 = 15 N

m2 = 0.5 kg
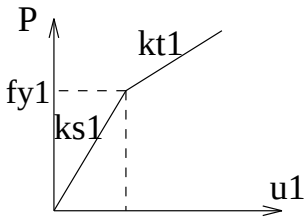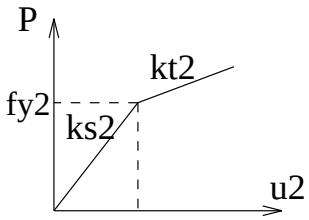
c2 = 1.0 N·sec/m