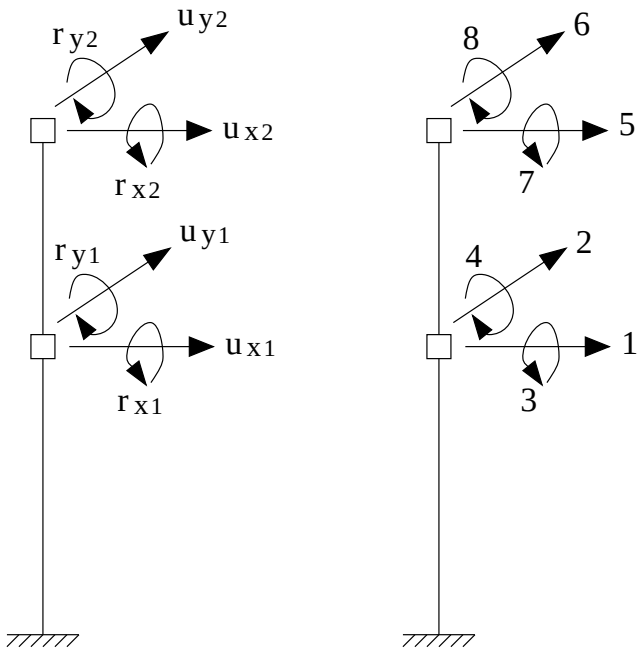
r y2
u y2
u x2
r x2
r y1
u y1
u x1
r x1
8
6
5
7
4
2
1
3