# Assessment of Solar Power Generation

**Candace Shoemaker**

**ENSE 623/ENPM 643 Fall 2007**

# Agenda

- *Introduction*
- *Overview*
- *Requirements*
- *The Solar System Description*
- *Test plan*
- *Conclusion*

# Introduction

- **Homeowner concerns**
  - Rising energy prices
  - Energy conservation
- **Alternative power generation is essential**
  - Reduce pollution
  - Reduce foreign import dependence
  - Reduce cost

**Problem: Augment a home's energy supply?**

# Overview of Approach

- The largest, clean energy source is the Sun
- The Sun is a renewable, alternative energy source
- Investigate upgrading a home's power to include solar power generation
- Solar Power Subsystem
  - Develop subsystem requirements
  - Create simple design
  - Develop the subsystem test plan

# Subsystem Definitions

- Grid – tie: Connected in Parallel to utility power services
- Inverter – converts DC power, generated by the solar array to AC
- PV – Photovoltaic module; solar array module

# Subsystem Components

- Solar Panels

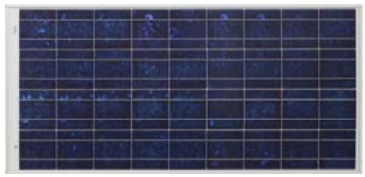

- Inverter/ Charger

- Battery (s)

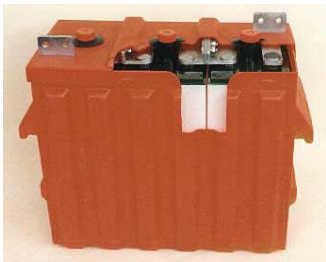

- DC disconnect meter

# High Level Requirements

- **The solar power subsystem upgrade**
  - **Shall be easy to implement and use**
  - **Shall provide significant amount of household power (industry standard is ~ 50% or more of household power)**
  - **Shall be cost effective**
  - **Total power supply shall be reliable**

# Requirement Example

| | | |
|---|---|---|
| | | Level 1 Requirements |
| | 1- 1 | Shall be easy to implement and use |
| | 1-2 | Shall provide significant amount of household power |
| | | Level 3 Requirements |
| | 2-1.1 | Shall fit on the roof (28 ft x 14 ft) |
| | 2-2.1 | Shall not weigh more than 100 lbs per square foot. |
| | 2-3.2 | Shall create enough power to carry household load. |
| | 2-3.1.2 | The solar array shall support a household load maximum of 50kWh per day at 120 V. |
| | 2-4.2 | Shall create enough voltage for the household power load |
| | | |

# External System Constraints

- Average direct Sunlight hours per day 4.47
- Local Maryland Code regulations
- Local Utility Company Regulations

# Typical Residential Power System

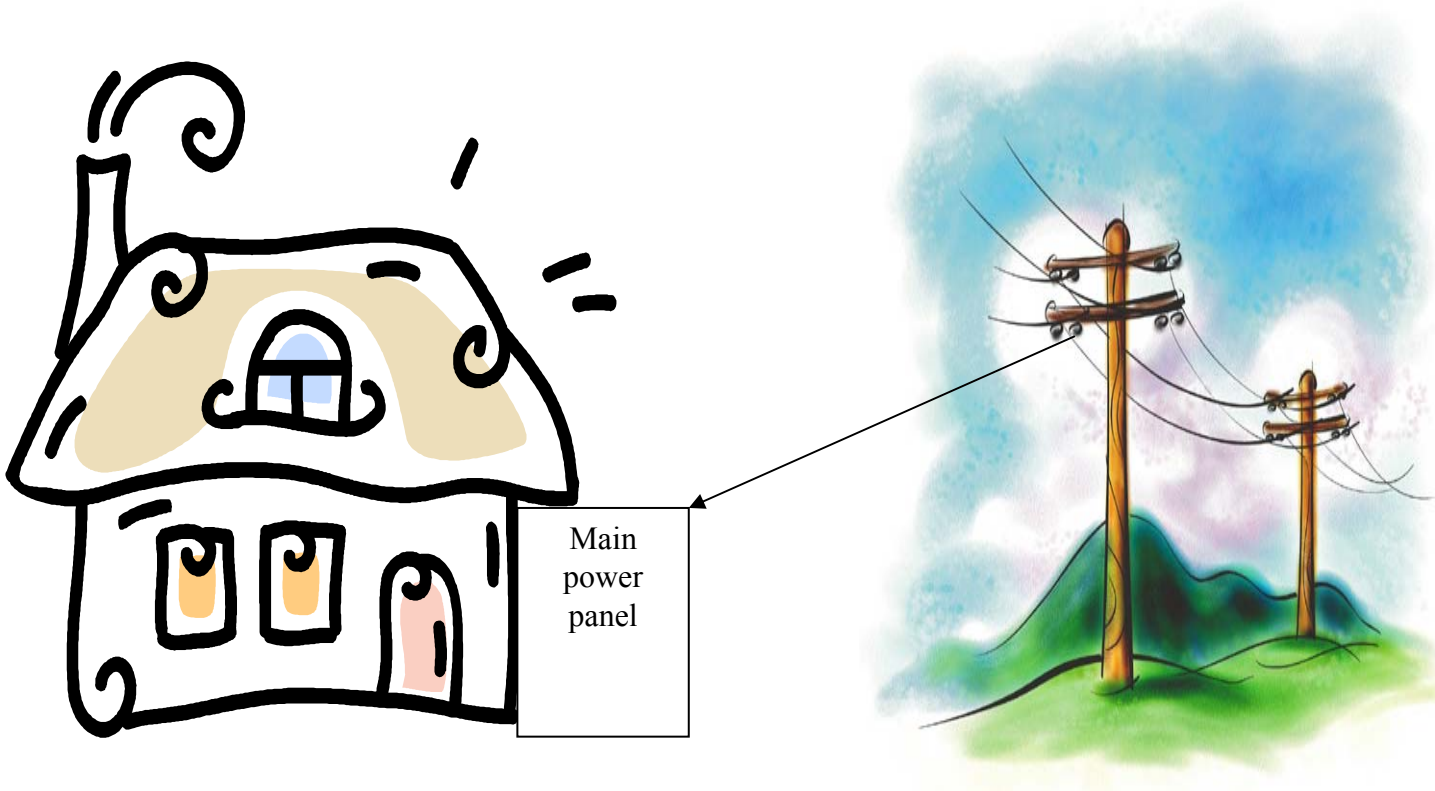

# Residential Power with Solar System

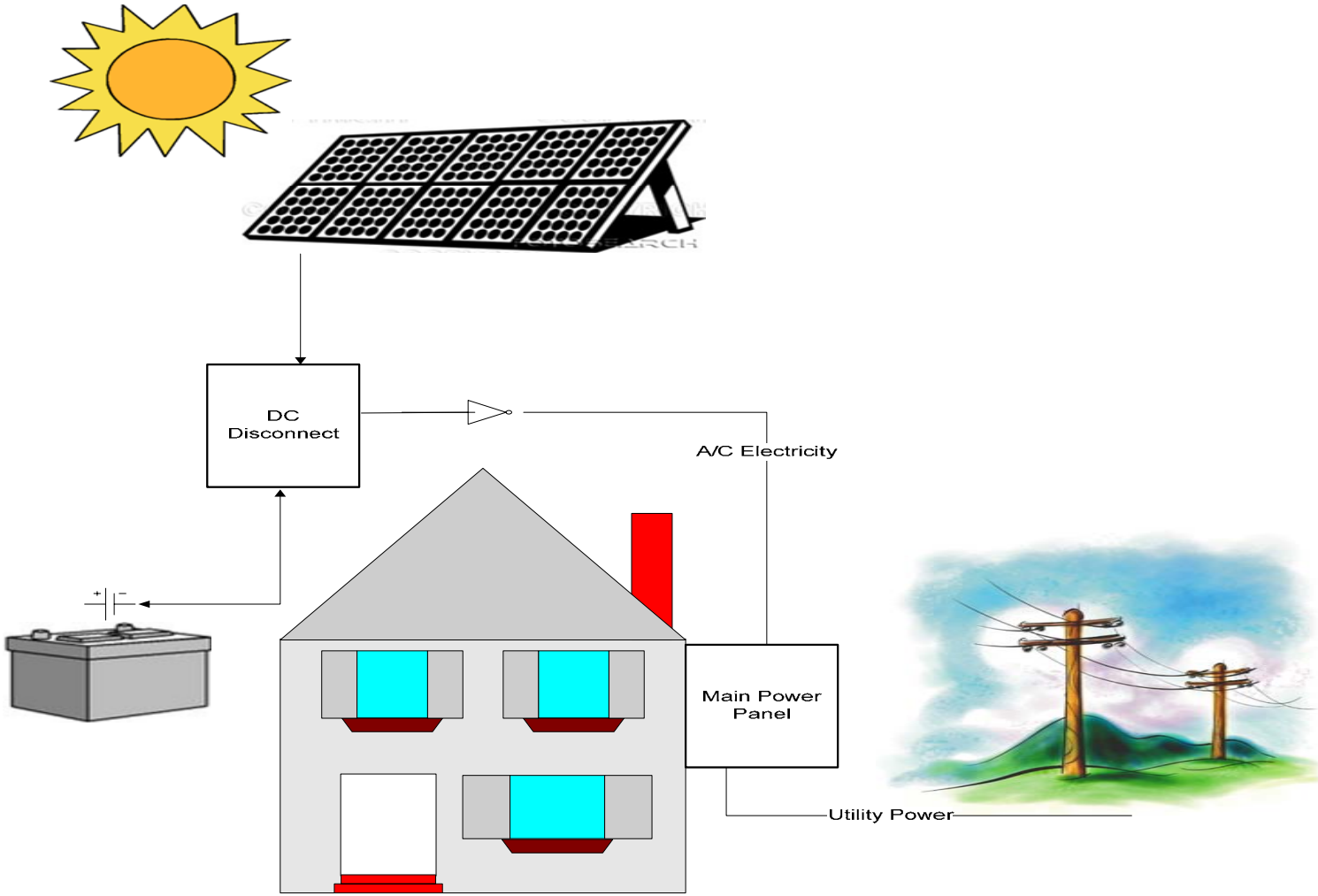

# Solar Subsystem Sequence Diagram

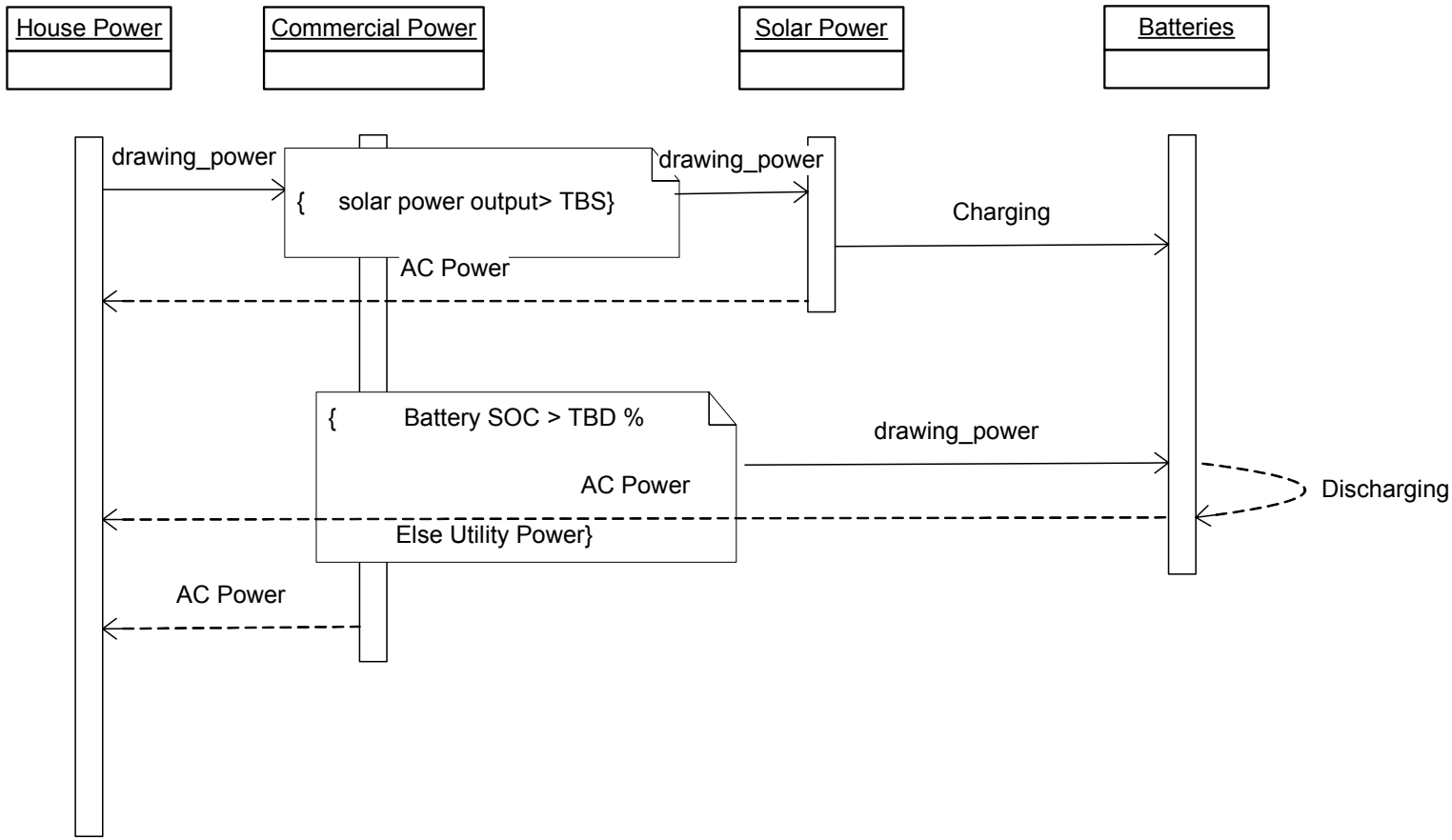

# Test Planning

- Mapped to requirements
- Focusing on the interfaces and component groups
  - Solar array modules: output
  - DC power disconnect
  - Inverter: input and output
  - Battery(s): input and output
  - Interactions between battery, solar array and power disconnect
  - Overall systems switching between utility, battery and solar power supplies

# Remaining Work

- **Finalize trade study for the components**
  - Will determine cost
  - Final Specs will be determined (power output, size, ect..)
- **Finalize test plan**
  - Traced to Requirements
  - Include verification method for each test

# Conclusion

- Demonstrated design of Solar Power Subsystem
- Requirements and design completed
- Requirements and test plan can be used for any home
- Solar Power Subsystem is a great alternative energy choice

**Go Green!**