PETglove: a new technology for portable molecular imaging

Kenneth H. Wong, Lucian G. Gruionu, Patrick Cheng, Pamela Abshire, Valeri Saveliev, et al.

Kenneth H. Wong, Lucian G. Gruionu, Patrick Cheng, Pamela Abshire, Valeri Saveliev, Seong K. Mun, Kevin Cleary, Irving N. Weinberg, "PETglove: a new technology for portable molecular imaging," Proc. SPIE 6509, Medical Imaging 2007: Visualization and Image-Guided Procedures, 65092P (22 March 2007); doi: 10.1117/12.712870

SPIE.

Event: Medical Imaging, 2007, San Diego, CA, United States

PETglove™: A new technology for portable molecular imaging

Kenneth H. Wong[*a], Lucian G. Gruionu[a,b], Patrick Cheng[a], Pamela Abshire[d], Valeri Saveliev[e], Seong K. Mun[a], Kevin Cleary[a], Irving N. Weinberg[c]

[a]Imaging Science and Information Systems (ISIS) Center, Department of Radiology, Georgetown University, Washington, DC, USA

[b]Faculty of Engineering and Management of Technological Systems, University of Craiova, Craiova, Romania

[c]Fast Imaging Company, Bethesda, MD, USA

[d]Department of Electrical and Computer Engineering and Institute for Systems Research, University of Maryland, College Park, MD, USA

[e]Applied Mathematics Department, Obninsk State University, Obninsk, Russia

ABSTRACT

PET (Positron Emission Tomography) scanning has become a dominant force in oncology care because of its ability to identify regions of abnormal function. The current generation of PET scanners is focused on whole-body imaging, and does not address aspects that might be required by surgeons or other practitioners interested in the function of particular body parts. We are therefore developing and testing a new class of hand-operated molecular imaging scanners designed for use with physical examinations and intraoperative visualization. These devices integrate several technological advances, including (1) nanotechnology-based quantum photodetectors for high performance at low light levels, (2) continuous position tracking of the detectors so that they form a larger 'virtual detector', and (3) novel reconstruction algorithms that do not depend on a circular or ring geometry. The first incarnations of this device will be in the form of a glove with finger-mounted detectors or in a "sash" of detectors that can be draped over the patient. Potential applications include image-guided biopsy, surgical resection of tumors, assessment of inflammatory conditions, and early cancer detection. Our first prototype is in development now along with a clinical protocol for pilot testing.

Keywords: PET, image guided interventions, tomographic reconstruction

1. INTRODUCTION

Positron Emission Tomography (PET) scanning is a functional nuclear medicine imaging examination where a radioactive tracer is introduced into the bloodstream and then imaged using an external detector. The chemistry of the tracer determines its biodistribution, and therefore the type of functional information that can be obtained. For example, the tracer ^{18}F-fluorodeoxyglucose (FDG) is transported across the cell membrane by the same carrier mechanism as that which transports glucose, so cells with higher metabolism such as active neurons and cancer cells preferentially accumulate the tracer. However, once FDG has become intracellular, it is phosphorylated in parallel to glucose by hexokinase to 18F-FDG-6-phosphate (18F-FDG-6-P). This subsequent product is not a substrate for successive biochemical reactions, and so the tracer becomes trapped, thus increasing its concentration in the cells [1-4]. Another

* wong@isis.georgetown.edu, phone 1 202 784-1521, fax 1 202 784-3479

Medical Imaging 2007: Visualization and Image-Guided Procedures, edited by Kevin R. Cleary, Michael I. Miga,
Proc. of SPIE Vol. 6509, 65092P, (2007) · 1605-7422/07/$18 · doi: 10.1117/12.712870

tracer, radiolabeled thymidine (2-^{11}C-thymidine [TdR]) is a direct indicator of cellular multiplication because it is rapidly incorporated into DNA in place of the normal nucleotides [5-6].

Because of the unique information that can be obtained from PET, this modality has rapidly become part of the standard of care for oncology patients and is used in diagnosis, staging and evaluating the effects of therapy. However, nearly all PET scanners are optimized for whole-body imaging, where the detectors are fixed to a ring gantry and the patient lies supine or prone on a table and is moved along the axis of the ring. Although this approach enables scanning of large regions of the body and matches the orientation of other cross-sectional imaging modalities such as CT and MRI, the fixed geometry imposes certain limits on resolution and count rate efficiency. Furthermore, the scanners are very large and cannot be easily moved into other locations, such as the operating room or an interventional radiology suite. Thus, the vital information from the PET scanner is extremely difficult to translate to the point of therapy.

Some positron detectors have been developed and tested intraoperatively, such as the NodeSeeker system (IntraMedical Imaging LLC, Los Angeles, CA). This system has a probe that is sensitive to both high-energy gamma rays and positrons, but only provides information on count rate and does not generate images. Essner *et al*. [7] examined the feasibility of using this system to intraoperatively differentiate normal from tumor-bearing tissue. Their *in vitro* studies with a FDG point source demonstrated the probe could identify the source with a 50% reduction in maximum counts 1.7 +/- 0.1 cm from the source (full-width half-maximum measurement). They also assessed the *in vivo* tumor-to-background ratios and found that these varied from 1.16:1 to 4.67:1 for melanoma patients (13 tumors) and from 1.19:1 to 7.92:1 for colon cancer patients (4 tumors). Franc *et al*. [8] later evaluated the capability of this system for intraoperative localization of recurrent melanoma during surgical resection. FDG was injected three hours prior to surgery, and surgical specimens were evaluated using the probe. In 3 of the 5 patients studied, the probe allowed the identification of nonvisualized and nonpalpable tumor foci that were later confirmed pathologic.

Although these results are encouraging, detector systems such as these have important limitations. The primary difficulty is that the lack of imaging means that only a small amount of the available information can be used by the physician, since the systems only measure the radioactivity from a single narrow direction in which the probe is pointed. Although positrons have a very short range in tissue, the annihilation photons do not, and thus determination of even the source depth is difficult. Finally, since these detectors are typically single blocks, they cannot perform coincidence measurements to identify the lines of response that are the key to conventional PET imaging.

To address these challenges, we are developing a new class of low cost, flexible geometry PET scanners optimized for use in the operating room or in conjunction with physical examinations. This work is an extension of the concept originally proposed by Weinberg *et al*. in 2001 [9]. These will be true imaging detectors and can be used in many situations where full-body scanners are either impractical or sub-optimal. In this paper, we describe some of the initial electrical and mechanical design of the system as well as simulations of its performance.

2. SYSTEM COMPONENTS

The PETglove^{TM} system integrates several technological advances in its core components. First, nanotechnology-based quantum photodetectors provide high performance at low light levels in a compact detector. Second, the detectors are continuously tracked so that they form a larger "virtual detector" that can be easily reshaped to match the region being imaged. Third, the reconstruction algorithms use this tracking information to determine the activity distribution relative to the glove. Fourth, a user interface provides the physician with an intuitive display of the activity distribution relative to his/her hands. In the following sections we will cover each of these components in further detail.

2.1. Scintillator/Silicon Photomultiplier Detector Assembly

Annihilation photons from the radioactive tracer are detected by a scintillator/solid-state photomultiplier assembly. The scintillator crystals are made from LuAG (lutetium aluminum garnet) and are in the form of long square rods measuring 15 mm x 2 mm x 2 mm (Crytur, Czech Republic). LuAG has similar scintillation properties to BGO (bismuth germinate) except with a slightly lower density (6.73 g/cm^3) and a faster decay time (70 ns). The peak emission wavelength of LuAG is 535 nm, which matches well with the response characteristics of the silicon photomultiplier.

Light from the scintillator is measured by a custom-designed silicon photomultiplier (SiPM) [10-11]. This photomultiplier differs from conventional avalanche photodiodes (APDs) in that the photocathode is divided into many subregions, each of which operates in avalanche mode. This approach allows the photomultiplier to have high gain but relatively low dark current, and also enables operation at much lower bias voltages (50 V) than conventional APDs (400 V). The photomultiplier is mounted on top of a TO-18 transistor shell and covered with a thin protective layer of epoxy. The scintillator and photomultiplier are coupled together using a thin optical interface pad (Saint-Gobain, Newbury, OH).

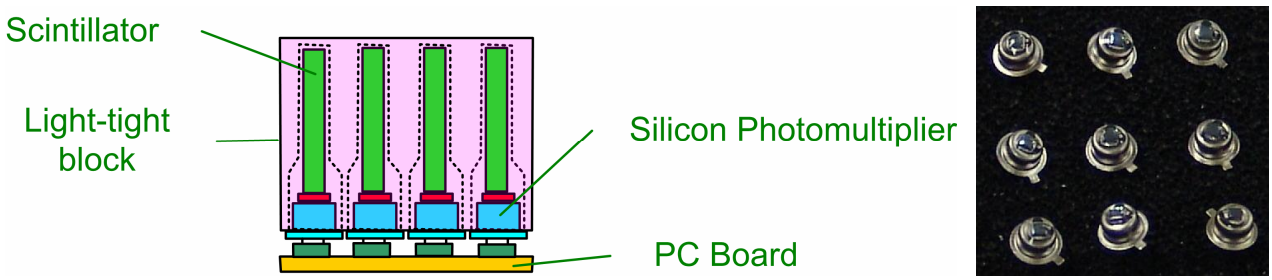

Fig. 1: Schematic of the detector assembly and photographs of several of the silicon photomultipliers. The active area of the photomultiplier is the dark square in the center of the top of the housing.

Each detector block has 16 scintillator/photomultiplier units arranged in a 4 x 4 grid. Because the size of the photomultiplier is small relative to the mounting shell (0.07 inches vs. 0.11 inches), the effective fill factor for the block is somewhat low, but we expect to be able to improve this in future generations of the detector block.

2.2. Detector Block Mechanical Design

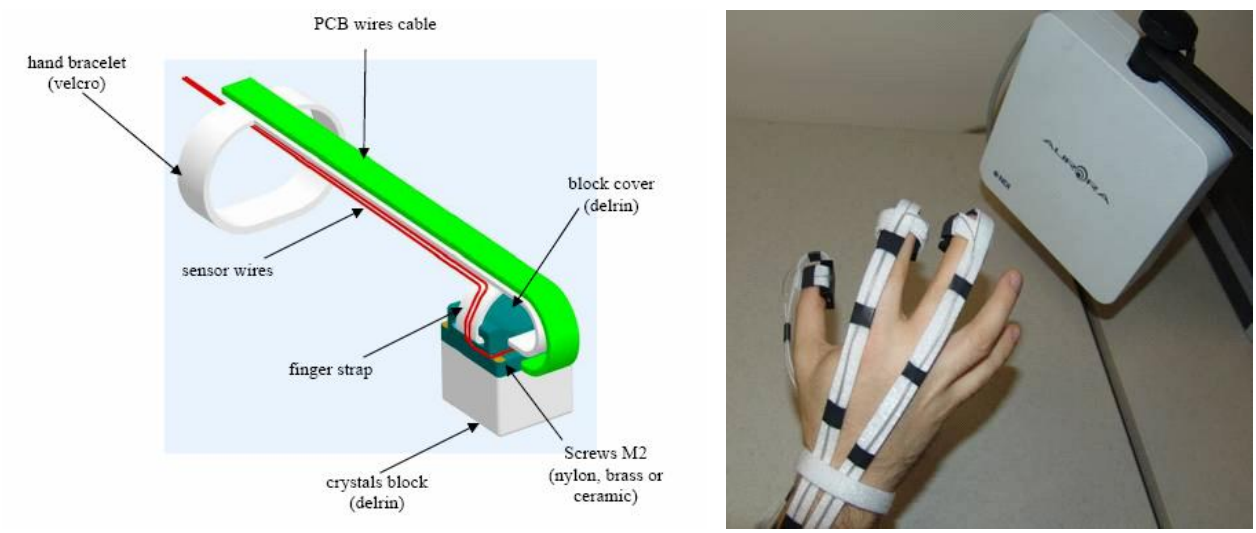

Fig. 2: Left side of the figure shows the mechanical design drawing of one PETglove detector block. Right side of the figure shows a photograph of a prototype PETglove illustrating the appearance of the wiring harnesses and block covers. Note that the crystal block is not attached to the fingers, since we do not yet have a complete working radionuclide detector. The large white box in the upper right of the photograph is the Aurora electromagnetic field generator (discussed in Section 2.3).

A mechanical design drawing of one detector assembly and a photograph of a prototype PETglove are shown in Fig. 2. The detector block covers have a curved surface that contours to the fingertip and are held to the finger by Velcro

straps. The detector itself is connected using a ribbon cable and the lead wires for electromagnetic tracking sensors -- described in the next section -- are mounted alongside the ribbon cable. A strap at the wrist keeps the cabling in line and also provides strain relief. The system is currently designed so that the detectors mount on the palmar side of the hand, but this configuration could be easily changed so that they mount on the dorsal side of the hand, although this would place more attenuating material between the detector and the objects being imaged.

Detailed drawings and photographs of the detector block are shown in Fig. 3.

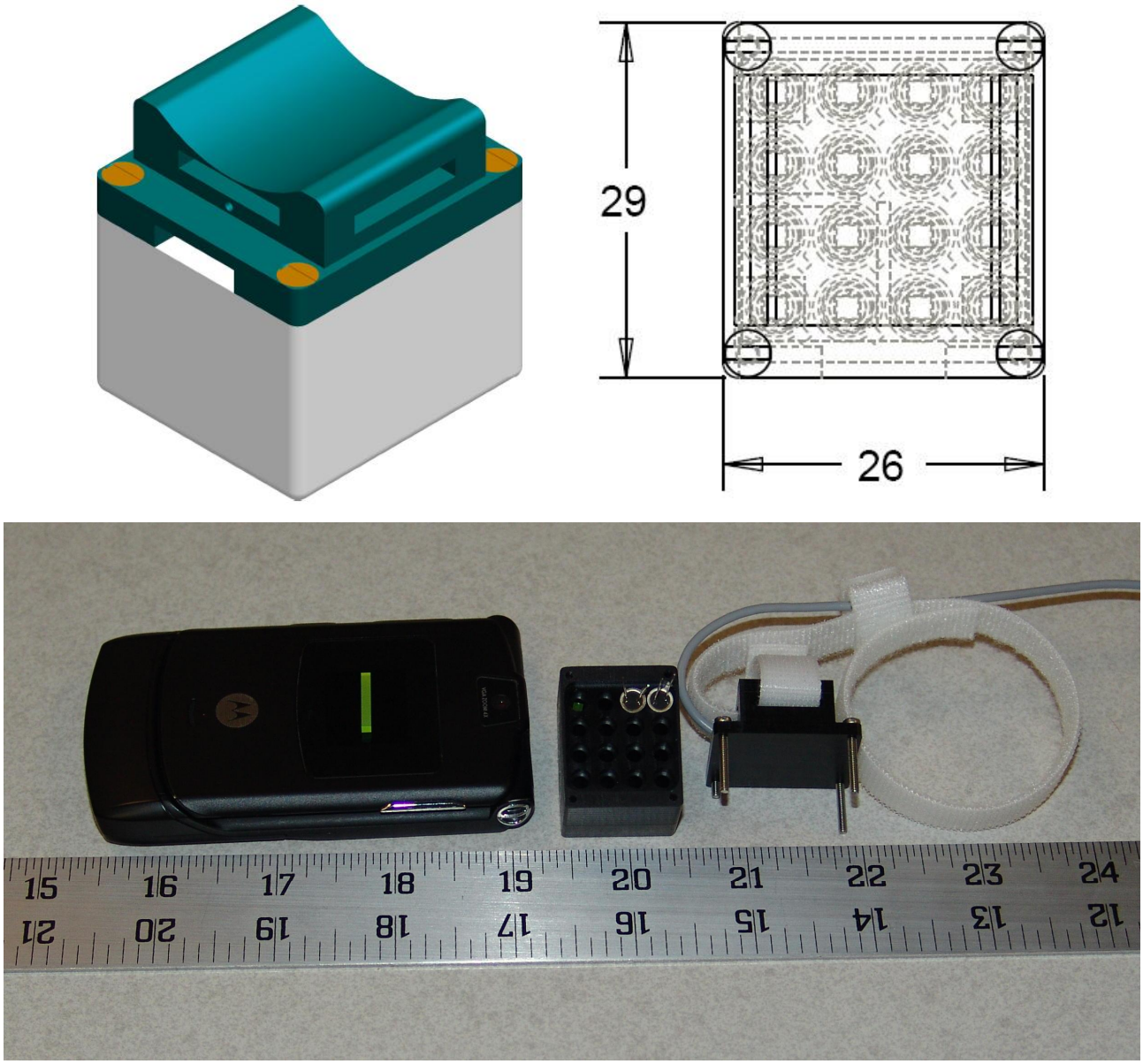

Fig. 3: Detector block mechanical drawings and photograph. Drawing scale is in mm. The photo shows a disassembled block with 2 of the crystal/photomultipliers pairs installed in the block. A cell phone is shown next to the block for scale, and a single scintillation crystal is sitting on top of the phone.

2.3. Electromagnetic Tracking of Detector Block Position and Orientation

In a conventional PET scanner, the detectors are either attached to a stationary ring or mounted on a gantry which rotates around the subject, so their position is known precisely. This allows the use of well-known tomographic reconstruction techniques, such as those reviewed in [12]. In the PETglove system, the detectors can be positioned arbitrarily and can also move during the study, so we must know their position and orientation as a function of time in order to be able to effectively reconstruct the radioactivity distribution.

The challenge for position tracking in this application is that the detectors are mounted on the fingertips and could potentially even be inside the patient. The detectors also have a nearly unlimited range of possible orientations. Such properties mean that maintenance of line-of-sight between a tracker and the detectors will be difficult, if not impossible. In this scenario, electromagnetic tracking systems have a key advantage in that they do not need to maintain a clear line-of-sight to the tracked objects.

We therefore are using the Aurora electromagnetic tracking unit (Northern Digital, Waterloo, ON) to determine the position and orientation of the detector blocks. This system has a field generator (which creates a rapidly switching electromagnetic field) and several small wired sensor coils. By measuring the current induced in each sensor coil, the Aurora determines the absolute position and orientation of the coil, except for the rotation of the coil around its own central axis, which cannot be determined due to symmetry. Thus, each sensor coil reports 5D information: the Cartesian position (x,y,z) and the orientation about two axes (pitch, yaw). The sensor coils can be read out at a maximum rate of 40 Hz. The range of the Aurora system is a cubic volume 500 mm on a side. Within this volume, the RMS position error for a coil ranges from 0.7-0.9 mm (1.3 mm at the extreme edge of the volume) and the orientation error is 0.3 degrees.

For the prototype PETglove, each detector block has two embedded orthogonal 5D sensor coils. The combination of the two coils creates a virtual tool for the Aurora system, enabling full 6D localization of the detector block.

Gruionu *et al*. recently evaluated the accuracy and precision of the electromagnetically tracked PETglove detectors as compared to the high-performance Optotrak Certus (Northern Digital, Waterloo, ON) optical tracking system, which has an absolute position accuracy of 0.1 mm and position repeatability of 0.01 mm. In these tests, they determined that the mean positioning error for the detectors was 2.1 mm based on a series of 20 different hand configurations [13].

2.4. Image Reconstruction

A block diagram of the data flow for the PETglove system is shown in Fig. 4. Coincidence events from the detector are passed to a controller as a pair of detector pixels denoted by (D,i,j) where D is the detector number and i,j represents the pixel position within that detector. The electromagnetic tracking system continuously reports the position and orientation of each detector and stores these values in a register within the controller. Thus, when a coincidence event occurs, the controller converts the detector pixel positions into 3D (X,Y,Z) endpoints of a line of response (LOR). The annihilation of the positron must therefore have occurred somewhere along that line. These lines of response are then used by an iterative reconstruction engine to determine the activity distribution. Our initial specification for the PETglove requires 30 seconds to form an image, depending on the amount of injected radioactivity.

In essence, the PETglove system uses small, movable, and trackable detectors to create a single larger "virtual" detector whose coordinate system is defined by the Aurora field generator. This approach poses some interesting challenges for image reconstruction. First, there is an inherent assumption that the activity distribution is time-invariant, at least during the acquisition time. For the clinical applications which we envision, this assumption is likely to be true since we will not be imaging dynamic systems such as the heart. Although some targets for resection surgery could be affected by respiratory motion in the abdomen and thorax, the PETglove can mitigate these effects since the operator can use their hands to stabilize the objects that are being imaged. Second, the detectors do not form a complete ring, which creates potential gaps in the sampling of the projection data. This is illustrated in an early simulation study of the PETglove, as shown in Fig. 5. Fortunately, the sufficiency conditions for tomographic reconstruction are well-known [14-15]. Furthermore, because the tracking system for the PETglove monitors the detector positions and orientations, it can provide feedback to the operator indicating (1) where the detectors should be positioned in order to gather new, non-redundant projection data, and (2) when a sufficient region of space has been sampled to create the reconstruction.

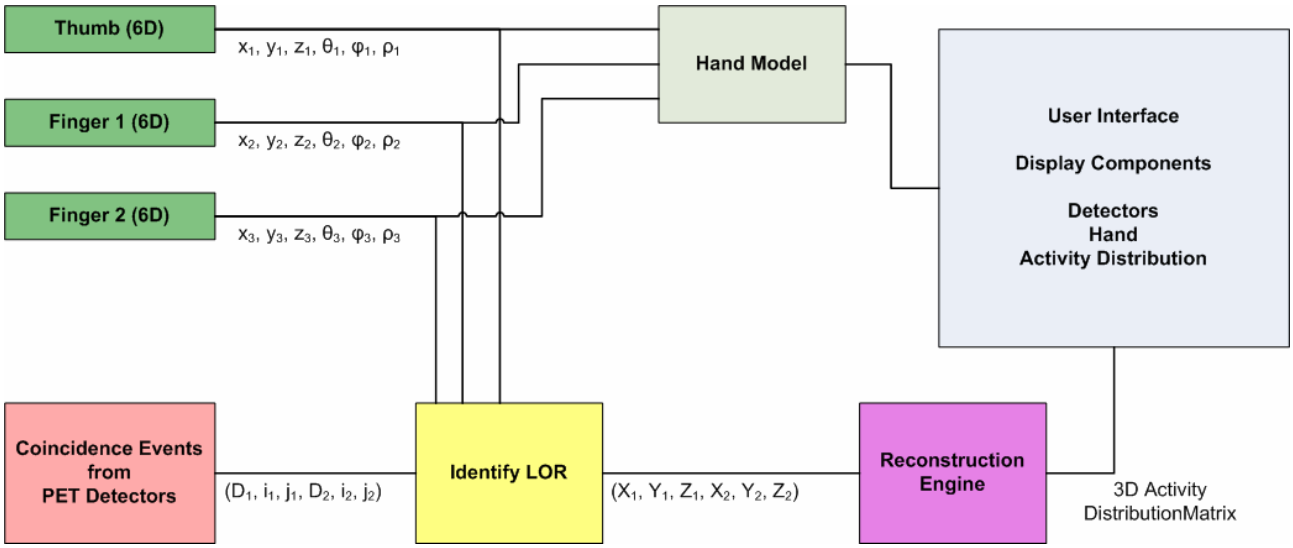

Fig. 4: Block diagram of data flow in the PETglove system. The position and orientation of the detectors are continuously monitored by electromagnetic tracking. These data are used to create a model hand in the graphical user interface, and are also combined with coincidence data from the detectors to generate the endpoints of lines of response (LOR). These LOR then are used to reconstruct the activity distribution.

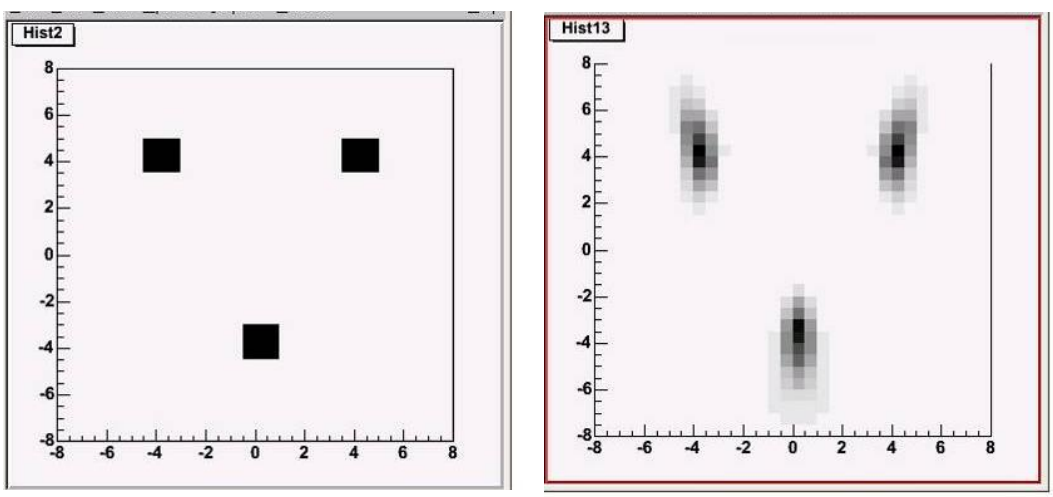

Fig. 5: Mathematical simulation of PETglove reconstruction where the three detectors remain stationary. On the left side of the figure is the known activity distribution, and on the right is a simulated reconstruction of this activity distribution, using an iterative maximum-likelihood algorithm. Lengthening of the square objects is observed consistent with the limited angular sampling from the projection data (images prepared by Dr. Stephen Adler, TelaCode, LLC, Bethesda, MD, USA).

2.5. User Interface

The graphical user interface (GUI) is built with a combination of open source software components, including IGSTK (Image Guided Surgery Toolkit) [16], VTK (Visualization Toolkit), and FLTK (Fast Light Toolkit). The use of IGSTK allows us to design the system to work with an abstract tracker class, so that other position tracking technologies (e.g., motion encoders, optical tracking, wireless electromagnetic tracking) could be easily and quickly implemented. It also provides a highly robust framework -- based on state machines -- to minimize the likelihood of crashes and system errors. An image of the interface is shown in Fig. 6.

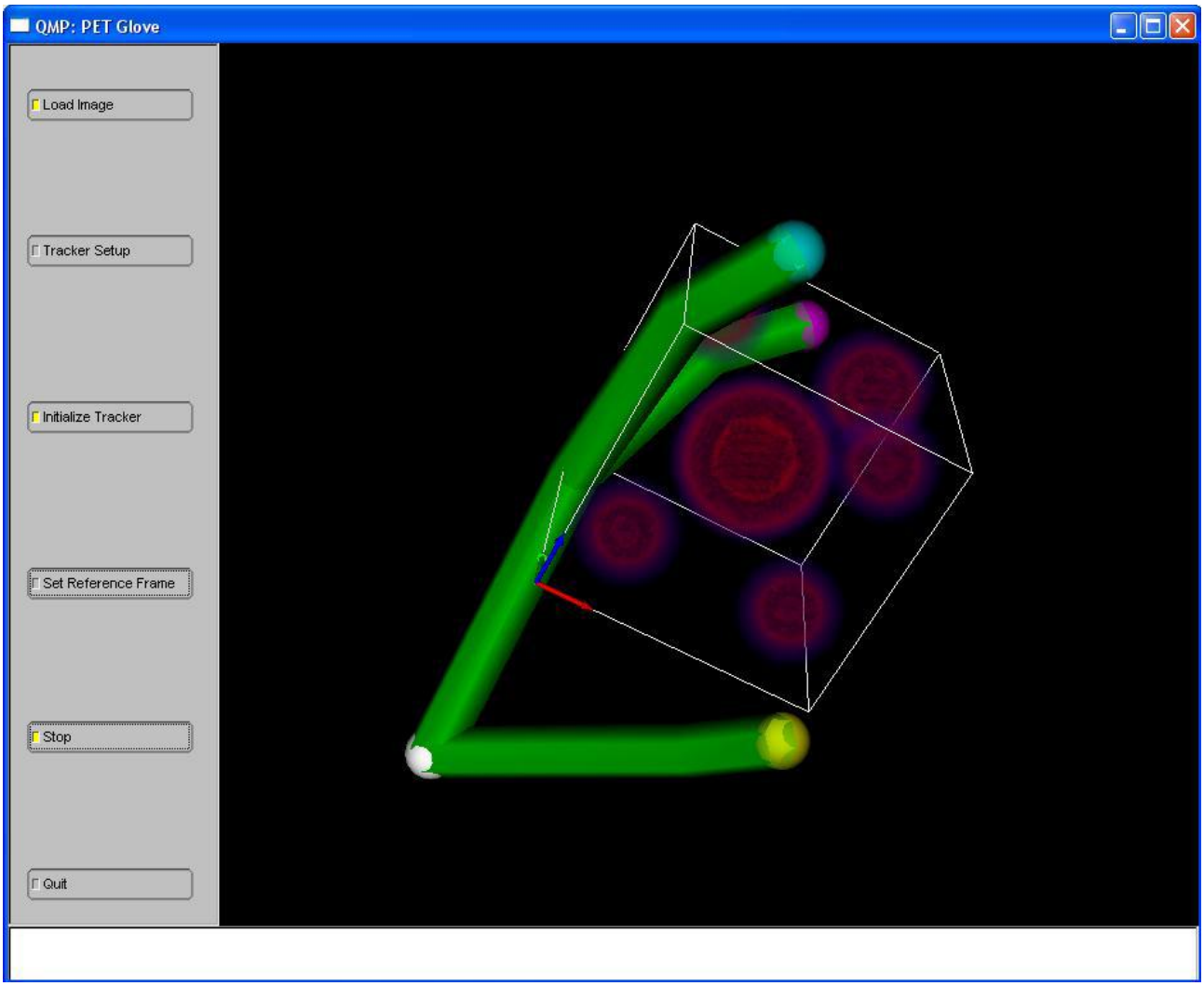

Fig. 6: Graphical user interface for the PETglove system, showing simple hand model (green bars) and a simulated activity distribution from 5 radionuclide sources. For this image, an electromagnetic tracking sensor coil has also been added to the wrist to provide position and orientation information for the base of the hand model. The wireframe cube in the image represents the current reconstruction volume.

One key goal of the PETglove system is that the interface should be information rich, yet highly intuitive. By superposing an image of the hand over the radioactivity distribution, the software enables the operator to quickly and easily relate an object they know well (their hand) to the functional image information from the patient. Thus, a

surgeon could place their fingers around a mass or structure in the body and quickly know if it had accumulated high concentrations of the tracer. Although the current hand model is less lifelike than we would prefer, there are good examples of hand models in the computer graphics literature [17-18] that could be incorporated in future versions of the GUI.

3. CONCLUSIONS

We have developed a prototype PETglove system with many novel and innovative features. First, we used silicon photomultipliers in place of conventional photomultiplier tubes, providing high signal gain in a compact and low-voltage package. These photodetectors also have the potential to be produced in volume at very low cost, which will significantly decrease the overall system cost, perhaps even allowing the detector block to be disposable. Second, we created a large and reconfigurable "virtual detector" by tracking the position and orientation of each detector block using an electromagnetic tracking system. This technology allows the PETglove to be configured in many possible orientations depending on the body site being imaged. Third, we have developed a tomographic reconstruction framework that incorporates this flexible geometry. Finally, we designed an intuitive graphical user interface for the PETglove based on powerful and robust open source software toolkits.

The unique capabilities of the PETglove, combined with its compact size and flexible geometry, should find application in a variety of clinical scenarios. We foresee the system being used during surgical resection of cancer, physical examination of joints and extremities, interventional radiology procedures, and other image-guided therapies that could benefit from on-site, immediate functional imaging. In the near-term future, we plan to complete a fully functional prototype and begin pilot clinical testing.

REFERENCES

1. Phelps ME, Huang SC, Hoffman EJ, Selin C, Sokoloff L, Kuhl DE. "Tomographic measurement of local cerebral glucose metabolic rate in humans with (F-18)2-fluoro-2-deoxy-D-glucose: validation of method." *Ann Neurol* 6:371 –388, 1979.

2. Gallagher BM, Fowler JS, Gutterson NI, MacGregor RR, Wan CN, Wolf AP. "Metabolic trapping as a principle of radiopharmaceutical design: some factors responsible for the biodistribution of [18F]2-deoxy-2-fluoro-D-glucose." *J Nucl Med* 19:1154 –1161, 1978.

3. Horton RW, Meldrum BS, Bachelard HS. "Enzymatic and cerebral metabolic effects of 2-deoxy-D-glucose." *J Neurochem* 44:567 –573, 1985.

4. Wolfgang WA, Schwaiger M, Avril N. "Quantitative assessment of tumor metabolism using FDG-PET imaging." *Nucl Med Biol* 27:683 –687, 2000.

5. Shields AF, Grierson JR, Kozawa SM, Zheng M. "Development of labeled thymidine analogs for imaging tumor proliferation." *Nucl Med Biol* 23:17–22, 1996.

6. Mankoff DA, Shields AF, Graham MM, Link JM, Eary JF, Krohn KA. "Kinetic analysis of 2-[carbon-11]thymidine PET imaging studies: compartmental model and mathematical analysis." *J Nucl Med* 39:1043–1055, 1998.

7. Essner R, Hsueh EC, Haigh PI, Glass EC, Huynh Y, Daghighian F. "Application of an [(18)F]fluorodeoxyglucose-sensitive probe for the intraoperative detection of malignancy." *J Surg Res* 96(1):120-6, 2001.

8. Franc BL, Mari C, Johnson D, Leong SP. "The role of a positron- and high-energy gamma photon probe in intraoperative localization of recurrent melanoma." *Clin Nucl Med* 30(12):787-91, 2005.

9. Weinberg IN, Zavarin V, Peter W, Pani R, Zeng J, Stepanov P, Beylin D, Anashkin E, DeVicentes G, Adler LP. "Flexible Geometries for Hand-held PET and SPECT cameras." Proceedings of the IEEE Medical Imaging Conference, 2001.

10. Saveliev V, Golovin V. "Silicon avalanche photodiodes on the base of metal-resistor-semiconductor (MRS) structures." *Nuclear Instruments and Methods in Physics Research Section A: Accelerators, Spectrometers, Detectors and Associated Equipment* 442(1-3):223-229, 2000.

11. Saveliev V, Belcari N, Dapos A, Ascenzo N, DelGuerra A, Golovin, A. "First Results of Scintillator Readout With Silicon Photomultiplier." *IEEE Transactions on Nuclear Science* 53(1):389-394, 2006.

12. Defrise M, Gullberg GT. "Image reconstruction." *Phys Med Biol* 51(13):R139-54, Jun 20 2006 (Epub).

13. Gruionu L, Wilson E, Weinberg IN, Cleary K, Wong KH. "Tracking accuracy evaluation of a PET-Enabled Glove for Molecular Image-Guided Surgery." To be presented at *Computer Assisted Radiology and Surgery: International Congress and Exhibition*, June 2007.

14. Orlov SS. "Theory of three-dimensional reconstruction I. Conditions of a complete set of projections." *Sov Phys Crystallogr* 20:312–4, 1976.

15. Smith BD. "Image reconstruction from cone-beam projection: necessary and sufficient conditions and reconstruction methods." *IEEE Trans Med. Imaging* 4:14–25, 1985.

16. Gary K, Ibanez L, Aylward S, Gobbi D, Blake B, Cleary K. "IGSTK: An Open Source Software Toolkit for Image-Guided Surgery." *IEEE Computer* 39(4):46-53, 2006.

17. Kurihara T, Miyata N. "Modeling Deformable Human Hands from Medical Images." *Eurographics/ACM SIGGRAPH Symposium on Computer Animation*, 2004.

18. Rhee T, Neumann U, Lewis JP, "Human Hand Modeling from Surface Anatomy," *ACM SIGGRAPH Symposium on Interactive 3D Graphics and Games*, 2006.